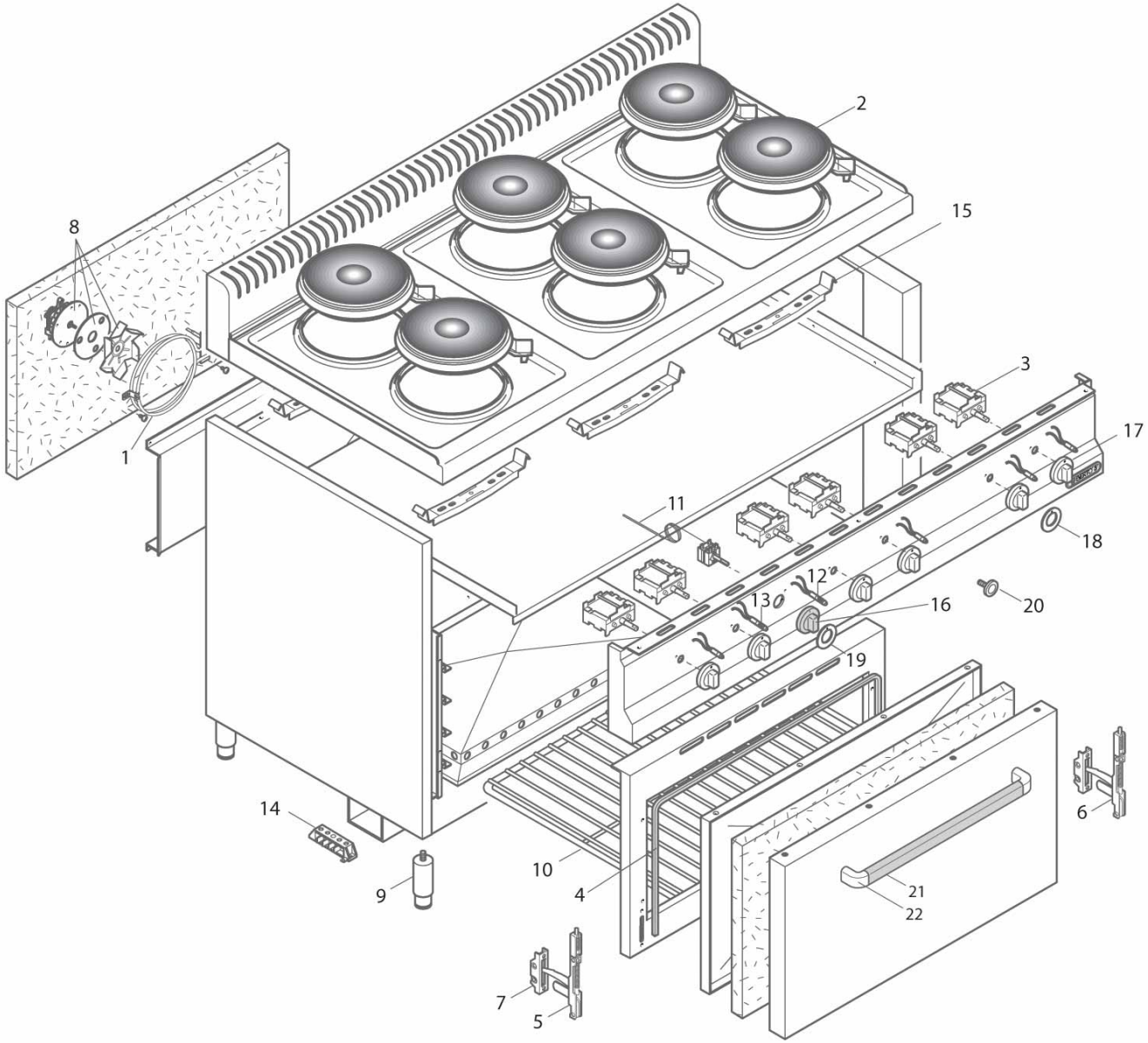
2
15
8
3
17
1
11
18
12
13
16
20
19
14
6
10
4
9
21
22
7
5

E6P6+FE1

Pos. Item	Codice Code	Descrizione	Item Description	Designation articles	Artikelbeschreibung	Decripciòn artìculos	N° pezzi - No. pieces					
												E6P6+FE1
1	23020500	Resist. tonda 3300w-240v (fe1)	Round he. element 3300w-240v (fe1)	Resistance ronde 3300w-240v (fe1)	Runde wide. 3300w-240v (fe1)	Resi. redonda 3300w-240v (fe1)						1
2	36037500	Piastra tonda d.180 2000w 230v	2000w 230v round plate	Plaque ronde 2000w 230v	Rundplatte 2000w 230v	Planche redonda 2000w 230v						6
3	22049900	Commutat. x cuc.piastre el.	Selector	Commutateur	Umschalter	Conmutador						6
4	22594300	Guarnizione forno fg1/fe1 s.600	Oven seal fg1-fe1 600 r.	Joint four fg1-fe1 600 r.	Dichtung backofen fg1-fe1 600 r.	Empaquetadura horno fg1-fe1 600 r.						1
8	23117700	Motoventilatore 230v 50/60 hz.	Electric fan 230v 50/60 hz.	Motoventilateur 230v 50/60 hz.	Motorventilator 230v 50/60 hz.	Motoventilador 230v 50/60 hz.						1
9	24684200	Piedino inox 1 1/2 h-125/175	Foot 1 1/2 h-125/175	Pied 1 1/2 h-125/175	Fuss 1 1/2 h-125/175	Pata 1 1/2 h-125/175						4
10	23848200	Grc 1/1- gr. forno 1/1 gn cuc. s.600	Grill 1/1 gn	Grille 1/1 gn	Rosteinheit 1/1 gn	Parrilla 1/1 gn						1
11	30064600	Termostato 270°c. + commutatore	270°c thermostat + cycle selector	Ther. 270°c + commutateur de cycle	Ther. 270°c + umschalter zyklus	Termostato 270°c + conmutador						1
12	30168500	Spia arancio 230v d.10mmt150Ø	Orange lamp 230v	Temoin lumineux orange 230v	Orange kontrollampe 230v	Piloto naranja 230v						1
13	30168800	Spia verde 230v d.10mmt150Ø	Green lamp 230v	Temoin lumineux vert 230v	Grune kontrollampe 230v	Piloto verde 230v						7
14	30184200	Morsettiera a 6 poli fv 122 b (lau 10)	Terminal board 6 poles	Bornier 6 poles	Klemmenleiste	Bornera 6 polos						2
15	36967100	Ass staffa Ø180 piastre el.	Bracket for electric plate	Etrier pour plaque	Klaue fÜr platte	Estribo para plancha						6
16	31876000	manopola pel nera perno6x4,6	Electric black knob	Manette noire electrique	Schwarze drehknopf- stift 6x4,6	Mando elÉctrico negro						1
17	31876200	manopola pel rossa perno6x4,6	Electric red knob	Manette electrique rouge	Elektro-drehknopf	Mando elÉctrico rojo						6
17	38877600	Man. pa66 p.6x4.6 a'180°'distanz.le	Knob pa66 p.6x4.6 a'180°'	Manette pa66 p.6x4.6 a'180°'	Drehknopf pa66 p.6x4.6 a'180°'	Mando pa66 p.6x4.6 a'180°'						6
18	31952500	Serig.rossa manop.cucina elet.	Electric knob serigraphy	Serigraphie manette electr.	Drehknopfserigraphie	Serigrafia mando electr.						6
19	31953500	Serig.rossa manop.frytop/forno	Knob serigraphy	Serigraphie manette	Drehknopfserigraphie	Serigrafia mando						1
20	32583800	Chiusura magnetica	Magnetic closure	Fermeture magnetique	Megnetverschluss	Cierre magnetico						1
21	31874000	Maniglia sez.ovale aisi 304 425 x 41	Handle aisi 304 425 x 41	Poignee aisi 304 425 x 41	Griffe aisi 304 425 x 41	Asa aisi 304 425 x 41						2
22	31979000	Terminale crom.lucido plastica term	Chromium-plated terminal	Terminal chromÉ poli	Verchromte grifendverschluss	Terminal cromado lustroso						4
22	31979200	Terminale rosso plastica term	Red plastic terminal	Cosse rouge plastique therm.	Roter thermo-kunststoffverschluss	Terminal rojo plastico						4