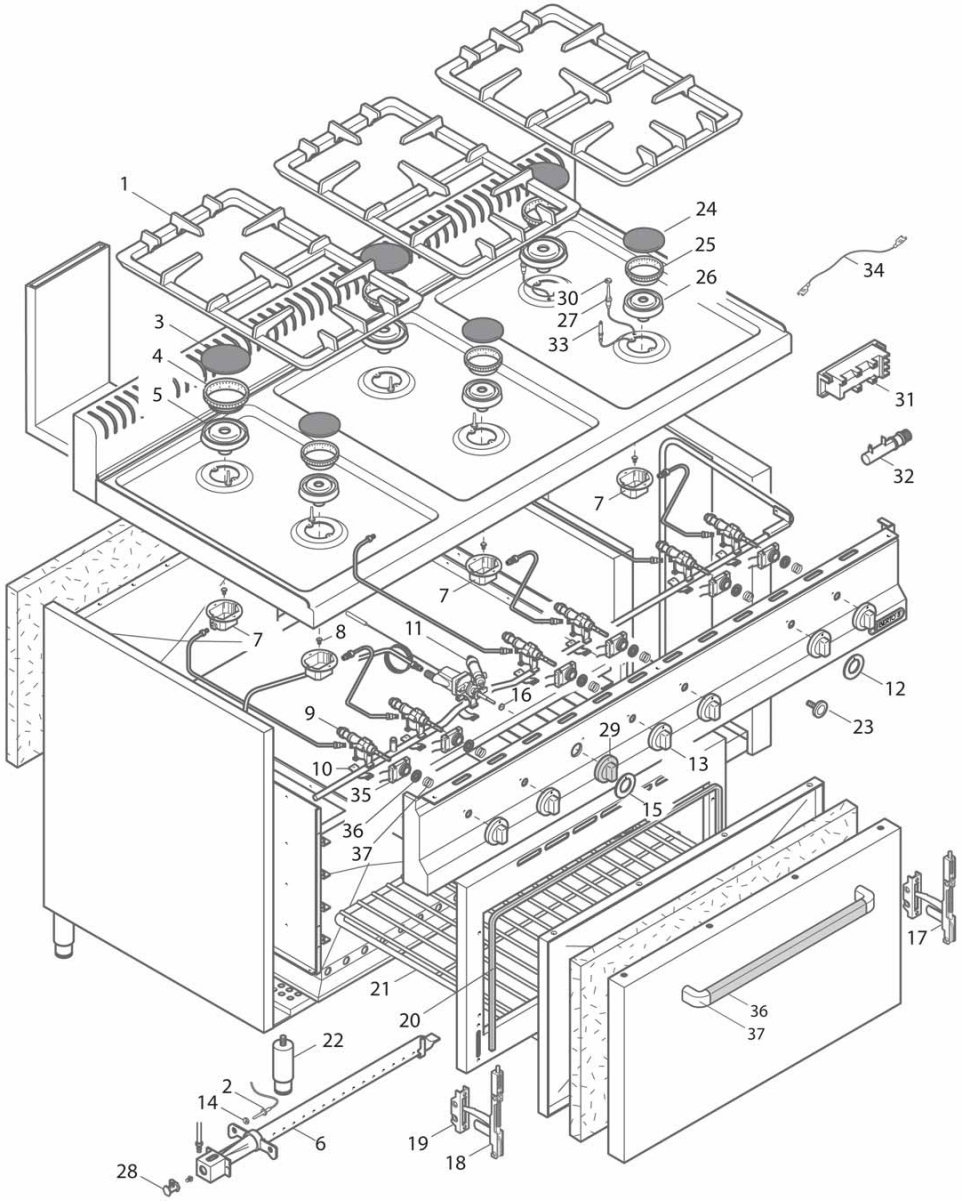
1
24
25
26
34
30
27
33
3
4
5
31
32
7
7
7
8
11
16
12
9
29
23
10
13
35
15
36
37
17
21
20
36
37
22
2
14
6
19
18
28

G6F6+FG1

Pos. Item	Codice Code	Descrizione	Item Description	Designation articles	Artikelbeschreibung	Decripciòn artìculos	N° pezzi - No. pieces					
												G6F6+FG1
1	36856700	Griglia nero 2f s.600	Enamelled grill	Grille ÉmaillÉe	Emaillierter rost	Parrilla esmaltada						3
2	22287500	Termocoppia x fg1	Oventhermocouple	Thermocouple four	Thermoelement backofen	Termopar horno						1
3	31281300	Coperc.bruc.ev.ult.rapid.	Burner cover	Couvercle bruleur	Deckel brenner	Tapa quemador						3
4	31280600	Anello spar.bruc.ev.ultra rap.	Burner flame divider ring	Couronne bruleur	Flamm. brenner	Aro repart. quemador						3
5	31280500	Supp.bruc.evoluz. ultra rapido	Burner support	Support bruleur	Brennerhalter	Soporte quemador						3
6	36275300	Ass. bruc. 2.7 kw fg 1/1 gn s.600	2.7 kw bu. thermocouple support	Br. 2.7 kw support thermocouple	Brenner 2.7 kw thermoelementhaler	Quemador 2.7 kw soporte termopar						1
7	31280100	Coppaxiniettore bruc.evoluz.	Housing for injecteur	Bloc pour injecteur	Becher fur einspritzduse	Copa para injector						6
8	40000000	Ugello: indicare modello e tipo gas	Injector: specify model and gas type	Gliceur: spe. modele et genre de gas	Duese: modell und gas-typ zeigen	Tobera: pre. modelo y tipo de gas						3
9	31275000	Rub. x nuova microcat. by-pass 52	Tap by-pass 52	Robinet by-pass 52	Hahn by-pass 52	Llave de paso by-pass 52						6
10	22966200	Briglia fissaggio rubinetto	Fixing tap clamp	Bride de fixation robinet	Bugel fur hahnbefestigung	Fiador ajuste llave de paso						7
11	22274000	Rubinetto forno by-pass 0.52	Oven tap by-pass 0.52	Robinet four by-pass 0.52	Hahn fur backofen by-pass 0.52	Llave de paso horno						1
12	31952000	Serig.rossa manop.gas evoluz.	Red gas knob serigraphy	Serigraphie manette rouge	Drehknopfserigraphie	Serigrafia mando rojo						6
13	35877000	Man. rossa p.8x6,5 a 0° ral3000	Red knob p.8x6,5 0° ral3000	Manette rouge p.8x6,5 a 0° ral3000	Drehknopf p.8x6,5 a 0° ral3000	Mando rojo p.8x6,5 a 0° ral3000						6
13	35875800	Manopola rossa p. 8x6,5 a 0°	Red knob 8x6,5 0°	Manette rouge 8x6,5 0°	Drehknopf 8x6,5 0°	Mando rojo 8x6,5 0°						6
14	22290900	Dado x termocoppia fg1	Thermocouple nut	Ecrou pour thermocouple	Mutter fur thermoelement	Tuerca para termopar						2
15	31952300	Ser.rossa manop.gas cuc;f.top	Red gas knob serigraphy	Serigraphie rouge manette	Rote drehknopfserigraphie	Serigrafia roja mando						1
16	22594900	Guarnizione rub.termostatato	Thermostat tap seal	Garniture robinet thermostat	Dichtung thermostat-hahn	Empaq. llave de paso termÓstato						1
20	22594300	Guarnizione forno fg1/fe1 s.600	Oven seal fg1-fe1 600 r.	Joint four fg1-fe1 600 r.	Dichtung backofen fg1-fe1 600 r.	Empaquetadura horno fg1-fe1 600 r.						1
21	23848200	Grc 1/1- gr. forno 1/1 gn cuc. s.600	Grill 1/1 gn	Grille 1/1 gn	Rosteinheit 1/1 gn	Parrilla 1/1 gn						1
22	24684200	Piedino inox 1 1/2 h-125/175	Foot 1 1/2 h-125/175	Pied 1 1/2 h-125/175	Fuss 1 1/2 h-125/175	Pata 1 1/2 h-125/175						4
23	32583800	Chiusura magnetica	Magnetic closure	Fermeture magnetique	Megnetverschluss	Cierre magnetico						1
24	31281000	Coperchio bruc.ev.rapido	Burner cover	Couvercle bruleur	Deckel brenner	Tapa quemador						3
25	31280300	Anello spar.bruc.evoluz.rapido	Burner flame divider ring	Couronne bruleur	Flamm.brenner	Aro repart. quemador						3
26	31280200	Supp. bruciat. evoluz. rapido	Burner support evol.	Support bruleur evol.	Brennerhalter evol.	Soporte quemador evol.						3
27	31289200	Termocoppia 750 mm cucina e	Thermocouple 750mm	Thermocouple 750mm	Thermoelemnt 750mm	Termopar 750mm						6
28	31327600	Portaugello per fg1	Injector holder	Porte-injecteur	Dusenhalter	Porta injector						1
29	35877100	Man. rossa p. 8x6,5 a 180°ral3000	Red knob p. 8x6,5 a 180°ral3000	Ma. rouge p. 8x6,5 a 180°ral3000	Drehknopf p. 8x6,5 a 180°ral3000	Mando rojo p. 8x6,5 a 180°ral3000						1
29	38877100	Manopola pa66 p.6x4.6 a '90°'	Knob pa66 p.6x4.6 a '90°'	Manette pa66 p.6x4.6 a '90°'	Drehknopf pa66 p.6x4.6 a '90°'	Mando pa66 p.6x4.6 a '90°'						1
29	35876100	Manopola rossa p. 8x6,5 a 180°	Red knob 8x6,5 180°	Manette rouge 8x6,5 180°	Drehknopf 8x6,5 180°	Mando rojo 8x6,5 180°						1
30	31807600	Dado x termocoppia e 0814	Nut for thermocouple	Ecrou pour thermocouple	Mutter fur thermoelement	Tuerca para termopar						6
31	31002200	Acc. elet. cand. cucine 4f e	Electric lighter 4f e	Allumeur electric 4f e	Elektro zund. 4f e	Encendido electr. 4f e						-
31	31002400	Acc. elet. cand. cucine 6f e	Electric lighter 6f e	Allumeur electric 6f e	Elektro zund. 6f e	Encendido electr. 6f e						-
32	31915000	Portapila x accens. cucine e	Battery holder	Porte-pile	Batterienhalter	Portapila						-
33	31187800	Candel.acc.cuc.el=600 molla	Ignition plug electr. cookers	Bougie d'allumage fourneaux electr.	Zundkerze el=60	Bujia de encendido cocinas electr.						-
34	31189700	Cavetto accensione cucine ev.	Ignition wire for evol. cookers	Cable allumage pour cuisines evol.	Zundkabel evoluzione herde	Cable encendido por cocinas evol.						-
35	31877600	Microcaten. 4f cuc. e nuova	Cat. microswitch 6ring cookers - new	Micro-interrupteur 6f cuis. - nouveau	Mikroschalter 4f kochmulden - neue	Micro catenaria 4f cocinas - nueva						-
36	31874000	Maniglia sez.ovale aisi 304 425 x 41	Handle aisi 304 425 x 41	Poignee aisi 304 425 x 41	Griffe aisi 304 425 x 41	Asa aisi 304 425 x 41						2
37	31979200	Terminale rosso plastica term	Red plastic terminal	Cosse rouge plastique therm.	Roter thermo-kunststoffverschluss	Terminal rojo plastico						2