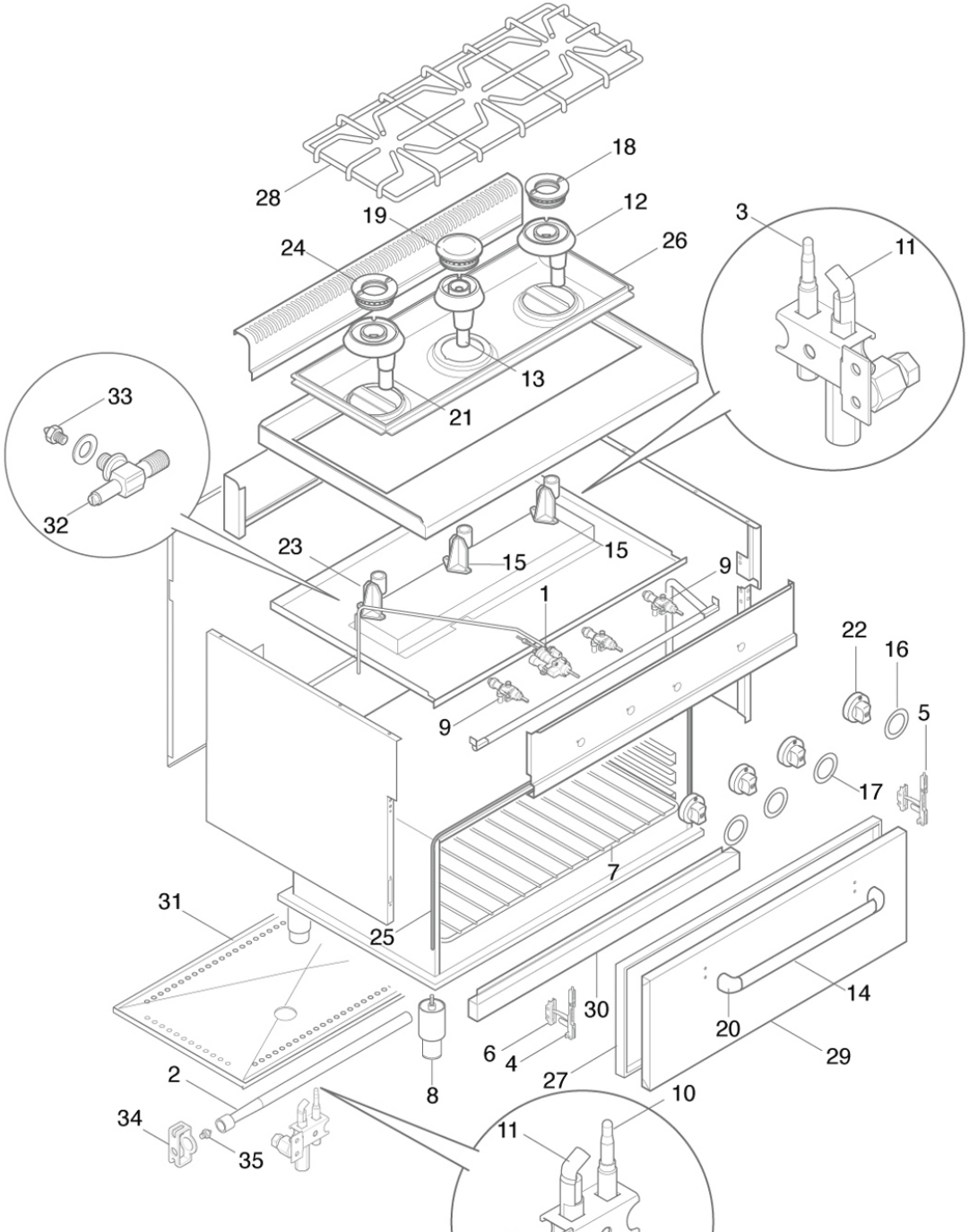
28
18
19
12
24
26
3
11
13
21
33
32
23
15
15
9
1
22
16
5
9
17
7
31
25
14
30
20
29
6
4
27
2
8
10
34
35
11

G6F3H9+T

Pos. Item	Codice Code	Descrizione	Item Description	Designation articles	Artikelbeschreibung	Decripciòn artìculos	N° pezzi - No. pieces					
												G6F3H9+T
1	22274600	Rub. pel 25/st; 9x1 120-320 c tar.	Tap pel 25/st	Robinet pel 25/st	Hahn pel 25/st	Llave de paso pel 25/st						1
1	22274700	+rubin.pel25/st 100-260°c fg/t +rubin.pel25/st 100-260°c fg/t s6/7/9/s	Tap pel 25/st 100-260°c fg/t s6/7/9/s	Ro. pel 25/st 100-260°c fg/t s6/7/9/s	Hahn pel 25/st 100-260°c fg/t hahn pel 25/st 100-260°c fg/t s6/7/9/s	Llave de paso pel 25/st 100-260°c fg/t llave de paso pel 25/st 100-260°c fg/t						1
2	22275600	Bruciatore forno t. s.600	T.oven burner 600 range	Bruleur four t. s.600	Backofensbrenner t. s.600	Quemador horno t. s.600						1
3	22289200	Term. 600 mm x plg/cpg/cucine	Thermocuple 600mm	Thermocuple 600mm	Thermoelement 600mm	Termopar 600mm						3
4	22607800	Cerniera sx x fe1/fg1 fcd8-fsd8	Left hinge	Charniere gauche	Scharnier links	Bisagra izquierda						1
5	22608100	Cerniera dx x fe1/fg1 fcd8-fsd	Right hinge	Charniere droite	Scharnier rechts	Bisagra derecha						1
6	22608200	Cern.fissa portarullino fe1fg1	Fixed hinge	Charniere fixe	Festes scharnier	Bisagra fija						2
7	23848400	Grc griglia forno tuttamisura s.600	Oven grill	Grill four	Ofen grill	Parrilla horno						1
8	24684200	Piedino inox 1 1/2 h-125/175	Foot 1 1/2 h-125/175	Pied 1 1/2 h-125/175	Fuss 1 1/2 h-125/175	Pata 1 1/2 h-125/175						4
9	31273600	Rubinetto pel21s;9x1;bypas 55	Tap pel 21s;9x1;bypas 55	Robinet pel 21s;9x1;bypas 55	Hahn pel 21s;9x1;bypas 55	Llave de paso pel 21s;9x1;bypas 55						3
10	31289000	Termocoppia 1500mm forno cucin	Thermocouple 1500mm	Thermocouple 1500mm	Thermoelement 1500mm	Termopar 1500mm						1
11	31291300	Pilota cuc.700 (2 posiz.)	Cooker pilot (2 posit.)	Veilleuse forneau (2 posit.)	Herd zundflamme	Piloto cocina (2 posit.)						4
12	31807000	Corpo bruc.d 6kw cromato	Chromium-plated burner body 6kw	Corps bruleur chrome 6kw	Brenner koerper 6kw verchromt	Cuerpo quemador cromado 6kw						1
13	31807200	Corpo bruc.c 3,5kw cromato	Chromium-plated bu. body 3,5kw	Corps bruleur chrome 3,5kw	Brenner koerper 3,5kw verchromt	Cuerpo quemador cromado 3,5 kw						1
14	31874000	Maniglia sez.ovale aisi 304 425 x 41	Handle aisi 304 425 x 41	Poignee aisi 304 425 x 41	Griffe aisi 304 425 x 41	Asa aisi 304 425 x 41						1
15	31913600	Supp. bruciatore c/d cucina	Burner support	Support bruleur	Brennerhalter	Soporte quemador						2
16	31952200	Serig.rossa manop.gas plg-cpg-	Red gas knob serigraphy	Serigraphie rouge manette	Rote drehknopfserigraphie	Serigrafia roja mando						3
17	31952300	Ser.rossa manop.gas cuc;f.top	Red gas knob serigraphy	Serigraphie rouge manette	Rote drehknopfserigraphie	Serigrafia roja mando						1
18	31954300	Spartif.bruc.d 6kw cromato	6kw burner cap	Chapeau bruleur 6kw	Flammenkranz 6kw	Sombrerete 6kw						1
19	31954400	Spartif.bruc.c 3,5kw cromato	3,5kw burner cap	Chapeau bruleur 3,5kw	Flammenkranz 3,5kw	Sombrerete 3,5kw						1
20	31979000	Terminale crom.lucido plastica term	Chromium-plated terminal	Terminal chromÉ poli	Verchromte grifendverschluss	Terminal cromado lustroso						2
21	35807000	Corpo bruciat. cromato 9kw	9kw burner body	Corps bruleur 9kw	Korper brenner 9kw	Cuerpo quemador 9kw						1
22	38877100	Manopola pa66 p.6x4.6 a '90°'	Knob pa66 p.6x4.6 a '90°'	Manette pa66 p.6x4.6 a '90°'	Drehknopf pa66 p.6x4.6 a '90°'	Mando pa66 p.6x4.6 a '90°'						4
22	35877100	Man. rossa p. 8x6,5 a 180°ral3000	Red knob p. 8x6,5 a 180°ral3000	Ma. rouge p. 8x6,5 a 180°ral3000	Drehknopf p. 8x6,5 a 180°ral3000	Mando rojo p. 8x6,5 a 180°ral3000						4
22	35876100	Manopola rossa p. 8x6,5 a 180°	Red knob 8x6,5 180°	Manette rouge 8x6,5 180°	Drehknopf 8x6,5 180°	Mando rojo 8x6,5 180°						4
23	35913600	Supp. bruc. e 9kw cucina	9kw burner support	Support bruleur 9kw	Brennerhalter 9kw	Soporte quemador 9kw						1
24	35954300	Spartif.bruc.e 9kw cromato	9kw burner cap	Chapeau bruleur 9kw	Flammenkranz brenner 9kw	Sombrerete quemador 9kw						1
25	36594100	Guarnizione forno t/te s.600	Oven door seal t/te s.600	Joint complet four t/te s.600	Komplette tÜrdichtung t/te s.600	Junta puerto horno t/te s.600						1
26	36779800	Ass.bacinella inox cuc. g6f3h9 s.600	Ass.bacinella inox cuc. g6f3h9 s.600	Ass.bacinella inox cuc. g6f3h9 s.600	Ass.bacinella inox cuc. g6f3h9 s.600	Ass.bacinella inox cuc. g6f3h9 s.600						1
27	36804300	Controporta forno t s.600	Controporta forno t s.600	Controporta forno t s.600	Controporta forno t s.600	Controporta forno t s.600						1
28	36857000	Gr. l.900 g6f3h9 fe cromata s.600	L.900 chromium-plated gril - 600 l.900 chromium-plated gril - 600 range	Verc. brennerrost l.900 - serie 600	Gr. l.900 g6f3h9 fe cromata s.600							1
29	36914900	Ass.porta est. forno t. s.600	Ass.porta est. forno t. s.600	Ass.porta est. forno t. s.600	Ass.porta est. forno t. s.600	Ass.porta est. forno t. s.600						1
30	36918000	Zoccolo anteriore t/te/fgp s.6/1200	Front base t/te/fgp 6/1200 r.	Bas. anterieure t/te/fgp s.6/1200	Bac. vorneblech t/te/fgp s.6/1200	Front base t/te/fgp 6/1200 r.						1
31	36839200	Fondo camera forno t	Fondo camera forno t	Fondo camera forno t	Fondo camera forno t	Fondo camera forno t						1
32	32812000	Portaugello completo	Nozzle holder cookers 6/7/9/1200	Porte-gicleur fou. s.6/7/9/12000	Dusebehalter cuc.s.6/7/9/1200	Portatobera coc. s.6/7/9/1200						3
33	40000000	Ugello: indicare modello e tipo gas	Injector: specify model and gas type	Gliceur: spe. modele et genre de gas	Duese: modell und gas-typ zeigen	Tobera: pre. modelo y tipo de gas						3
34	31327600	Portaugello per fg1	Injector holder	Porte-injecteur	Dusenhalter	Porta injector						1
35	40000000	Ugello: indicare modello e tipo gas	Injector: specify model and gas type	Gliceur: spe. modele et genre de gas	Duese: modell und gas-typ zeigen	Tobera: pre. modelo y tipo de gas						1