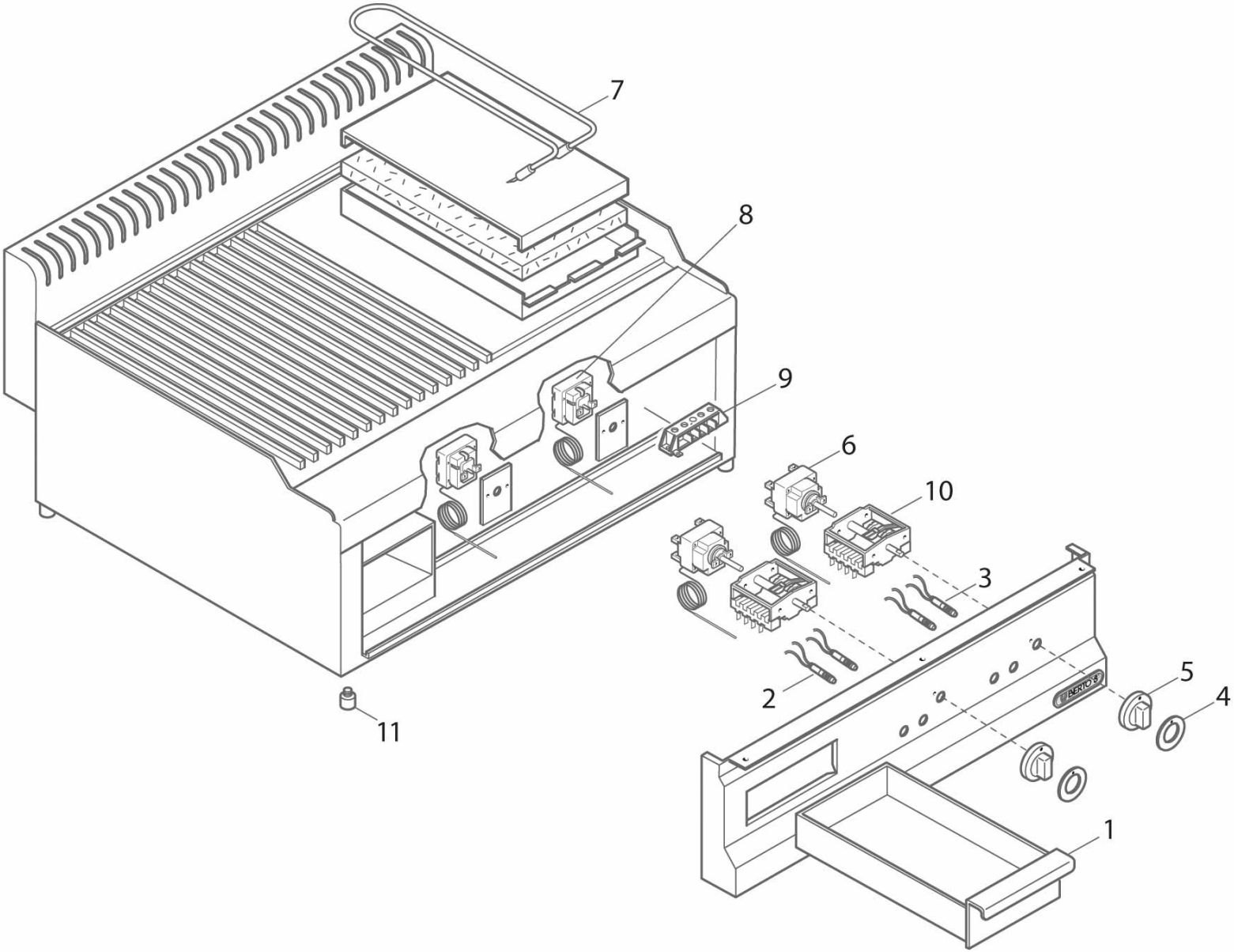
7
8
9
6
10
3
2
5
4
11
1
BERTO'S

E6FR6BP-2

Pos. Item	Codice Code	Descrizione	Item Description	Designation articles	Artikelbeschreibung	Decripciòn artìculos	N° pezzi - No. pieces					
												E6FR6BP-2
1	36791000	Ass. cassetto fry-top s.600	Drip tray fry-top s.600	Bac recueille sauces fry-top s.600	Sossen-auffangschale fry-top s.600	CajÓn-grasera fry-top s.600						1
2	30168500	Spia arancio 230v d.10mmt150Ø	Orange lamp 230v	Temoin lumineux orange 230v	Orange kontrollampe 230v	Piloto naranja 230v						2
3	30168800	Spia verde 230v d.10mmt150Ø	Green lamp 230v	Temoin lumineux vert 230v	Grune kontrollampe 230v	Piloto verde 230v						2
4	31953500	Serig.rossa manop.frytop/forno	Knob serigraphy	Serigraphie manette	Drehknopfserigraphie	Serigrafia mando						2
5	35877200	Man. rossa p. 6x4.6 a o° ral3000	Red knob p. 6x4.6 a o° ral3000	Ma. rouge p. 6x4.6 a o° ral3000	Drehknopf p. 6x4.6 a o° ral3000	Mando rojo p. 6x4.6 a o° ral3000						2
5	35876200	Manopola rossa p. 6x4.6 a o°	Red knob 6x4.6 o° c	Manette rouge 6x4.6 o° c	Drehknopf 6x4.6 o° c	Mando rojo 6x4.6 o° c						2
6	30064900	Termostato trif.270Ø x fe 2/1	Thermostat 270Ø - fe 2/1	Thermostat 270Ø - fe 2/1	Thermostat 270Ø - fe 2/1	Termostato 270Ø - fe 2/1						2
7	36039300	Resist.1350w240v fry-top s.600	1350w 240v heating element	RÉsistance 1350w240v	Widerstand 1350w240v	Resistencia 1350w240v						6
8	22069700	Termostato trif.sicur.fry-top	Security thermostat	Thermostat de surete	Sicherheitthermostat	Termostato de seguridad						2
9	30184200	Morsettiera a 6 poli fv 122 b (lau 10)	Terminal board 6 poles	Bornier 6 poles	Klemmenleiste	Bornera 6 polos						1
10	22050300	Interr. quadrip. fry-top/700;	Switch	Interrupteur	Schalter	Interruptor						2
11	30684100	Piedi. d.30xm8condado basso h.6mm	Foot h.6mm	Pied h.6mm	Fuss h.6mm	Pata h.6mm						4