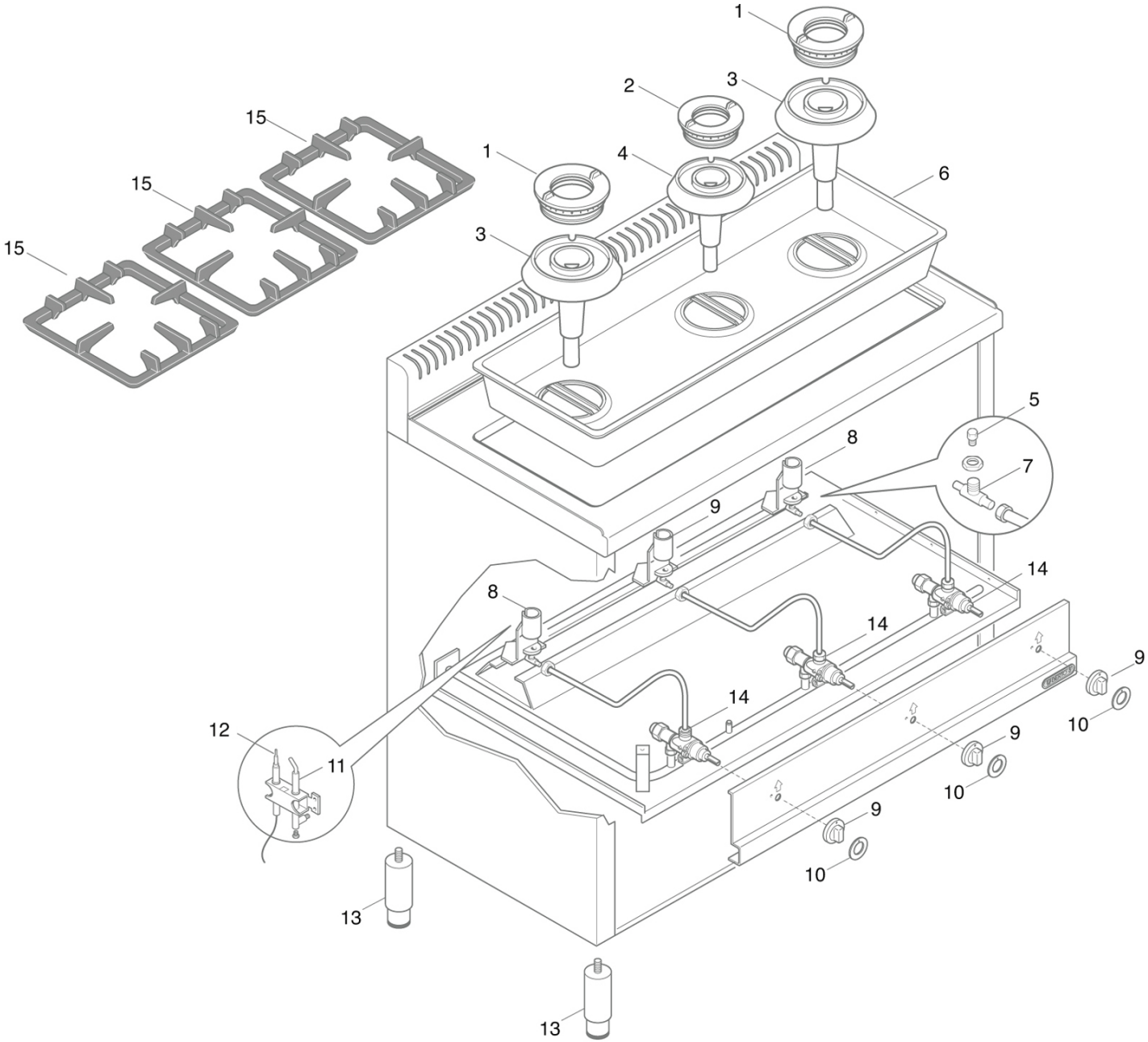
1
2
3
15
1
4
6
15
3
15
5
8
7
9
14
8
14
9
14
12
11
10
9
10
9
10
13
13

# G6F3MH12

| Pos. Item | Codice Code | Descrizione | Item Description | Designation articles | Artikelbeschreibung | Decripciòn artìculos | N° pezzi - No. pieces | | | | | |
|---|---|---|---|---|---|---|---|---|---|---|---|---|
| | | | | | | | | | | | | G6F3MH12 |
| 1 | 35954300 | Spartif.bruc.e 9kw cromato | 9kw burner cap | Chapeau bruleur 9kw | Flammenkranz brenner 9kw | Sombrerete quemador 9kw | | | | | | 2 |
| 2 | 31954300 | Spartif.bruc.d 6kw cromato | 6kw burner cap | Chapeau bruleur 6kw | Flammenkranz 6kw | Sombrerete 6kw | | | | | | 1 |
| 3 | 35807000 | Corpo bruciat. cromato 9kw | 9kw burner body | Corps bruleur 9kw | Korper brenner 9kw | Cuerpo quemador 9kw | | | | | | 2 |
| 4 | 31807000 | Corpo bruc.d 6kw cromato | Chromium-plated burner body 6kw | Corps bruleur chrome 6kw | Brenner koerper 6kw verchromt | Cuerpo quemador cromado 6kw | | | | | | 1 |
| 5 | 40000000 | Ugello: indicare modello e tipo gas | Injector: specify model and gas type | Gliceur: spe. modele et genre de gas | Duese: modell und gas-typ zeigen | Tobera: pre. modelo y tipo de gas | | | | | | 6 |
| 6 | 36779000 | Bacinella smalt.cuc.1200 3f s.600 | Bacinella smalt.cuc.1200 3f s.600 | Bacinella smalt.cuc.1200 3f s.600 | Bacinella smalt.cuc.1200 3f s.600 | Bacinella smalt.cuc.1200 3f s.600 | | | | | | 1 |
| 7 | 32327600 | Portaugello gl-plg-cpg-cucine | Injector holder | Support injecteur | Dusenhalter | Soporte de tobera | | | | | | 3 |
| 8 | 35913600 | Supp. bruc. e 9kw cucina | 9kw burner support | Support bruleur 9kw | Brennerhalter 9kw | Soporte quemador 9kw | | | | | | 2 |
| 9 | 31913600 | Supp. bruciatore c/d cucina | Burner support | Support bruleur | Brennerhalter | Soporte quemador | | | | | | 1 |
| 10 | 31952200 | Serig.rossa manop.gas plg-cpg- | Red gas knob serigraphy | Serigraphie rouge manette | Rote drehknopfserigraphie | Serigrafia roja mando | | | | | | 3 |
| 11 | 31291300 | Pilota cuc.700 (2 posiz.) | Cooker pilot (2 posit.) | Veilleuse forneau (2 posit.) | Herd zundflamme | Piloto cocina (2 posit.) | | | | | | 3 |
| 12 | 22289200 | Term. 600 mm x plg/cpg/cucine | Thermocuple 600mm | Thermocuple 600mm | Thermoelement 600mm | Termopar 600mm | | | | | | 3 |
| 13 | 24684200 | Piedino inox 1 1/2 h-125/175 | Foot 1 1/2 h-125/175 | Pied 1 1/2 h-125/175 | Fuss 1 1/2 h-125/175 | Pata 1 1/2 h-125/175 | | | | | | 4 |
| 14 | 31273600 | Rubinetto pel21s;9x1;bypas 55 | Tap pel 21s;9x1;bypas 55 | Robinet pel 21s;9x1;bypas 55 | Hahn pel 21s;9x1;bypas 55 | Llave de paso pel 21s;9x1;bypas 55 | | | | | | 3 |
| 15 | 36857200 | Griglia l.1200 g6f3h12 fe cr s.600 | Chromium-plated grill l.1200 600 r. | Gr. chromee l.1200 g6f3h12 s.600 | Rost br.1200 g6f3h12 fe ver. s.600 | Par. l.1200 g6f3h12 cromada s.600 | | | | | | 1 |
| 15 | 35856500 | Griglia rough nero 900 | Black rough grill | Grille rough noire | rough rost | Parrilla negra rough | | | | | | 3 |
| 16 | 35876100 | Manopola rossa p. 8x6,5 a 180° | Red knob 8x6,5 180° | Manette rouge 8x6,5 180° | Drehknopf 8x6,5 180° | Mando rojo 8x6,5 180° | | | | | | 3 |
| 16 | 38877100 | Manopola pa66 p.6x4.6 a '90°' | Knob pa66 p.6x4.6 a '90°' | Manette pa66 p.6x4.6 a '90°' | Drehknopf pa66 p.6x4.6 a '90°' | Mando pa66 p.6x4.6 a '90°' | | | | | | 3 |
| 16 | 35877100 | Man. rossa p. 8x6,5 a 180°ral3000 | Red knob p. 8x6,5 a 180°ral3000 | Ma. rouge p. 8x6,5 a 180°ral3000 | Drehknopf p. 8x6,5 a 180°ral3000 | Mando rojo p. 8x6,5 a 180°ral3000 | | | | | | 3 |